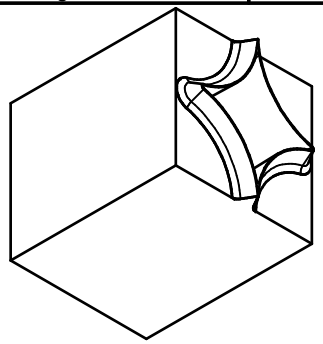

FS1003-1

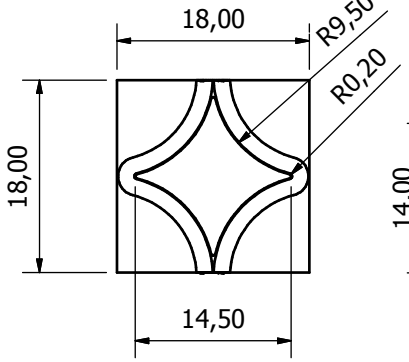

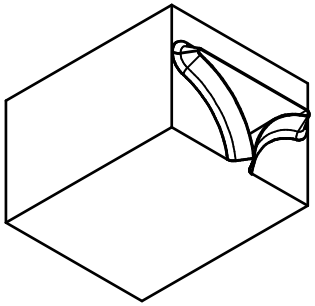

HS1003-2

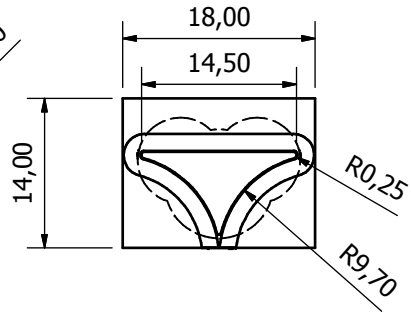

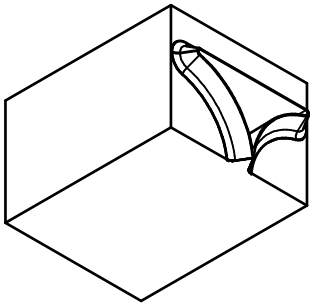

HS1003-8

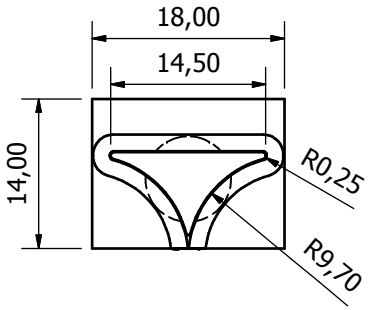

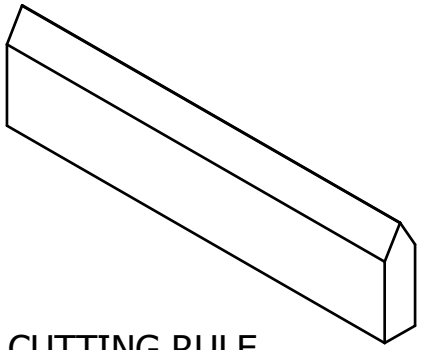

CUTTING RULE

0.7, 3.00 OR 4mm 23.80mm HIGH

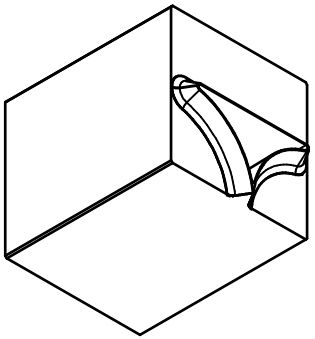

HS1003-18

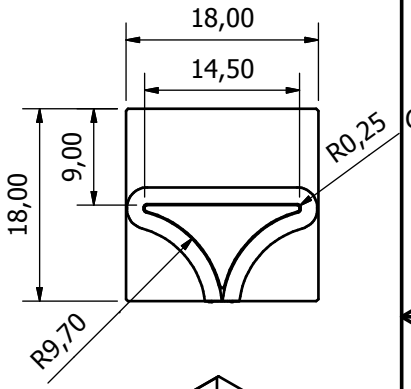

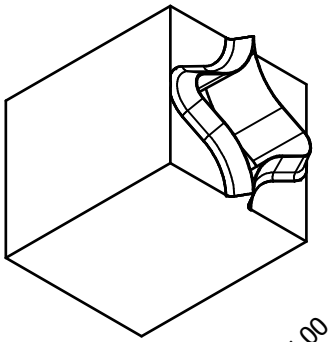

FS1005-1

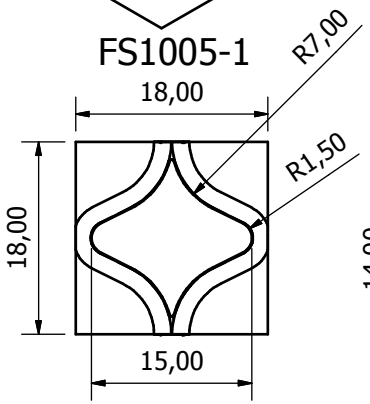

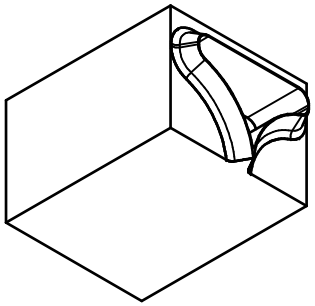

HS1005-2

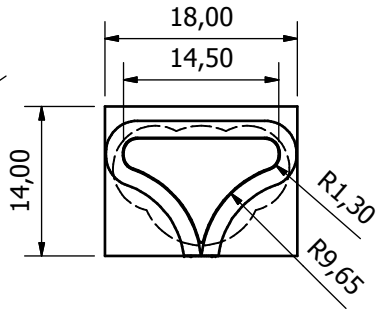

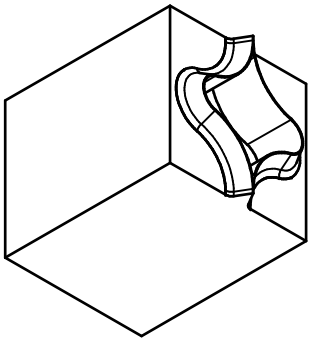

FS1007-1

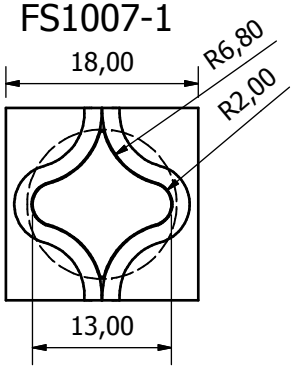

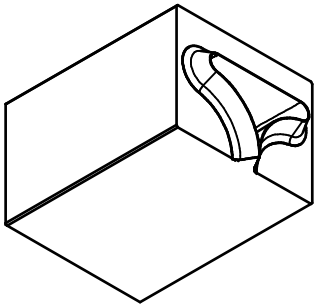

HS1007-2

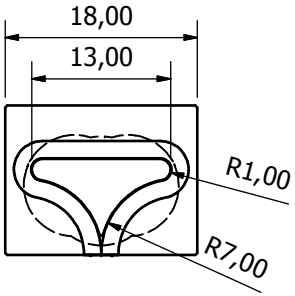

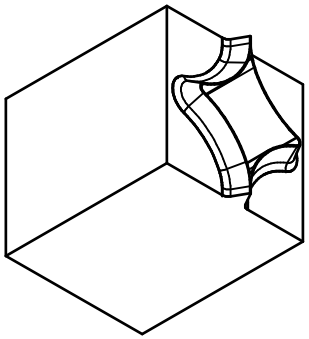

FS1008-1

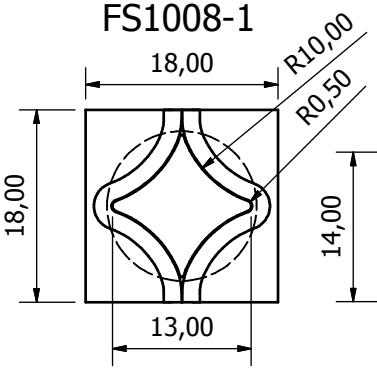

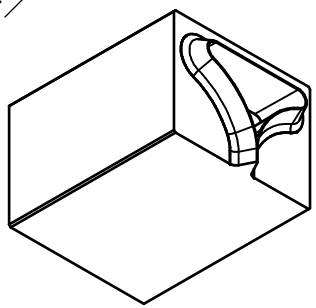
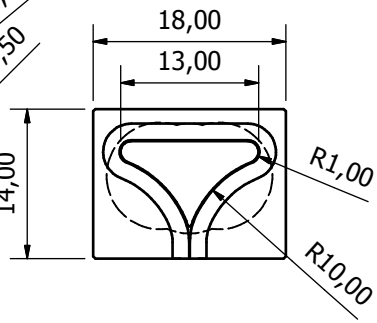
HS1008-2